REVISION HISTORY						
CHG NO	ZONE	REV	DESCRIPTION	DATE	BY	APPROVED
99-00261	B6	1	ADDED NOTE 4X Ø.63[15.9] THRU	3-16-99	ERH	MJC
99-00344	B6,C4,C5	2	CHG'D FRT COVER CONFIG,DEL'D ANTI-ROTATION BOLT	04-09-99	JTT	BMR
00-0579	ALL	3	UPDATED TO CURRENT STANDARDS	11-16-00	DMM	DMM

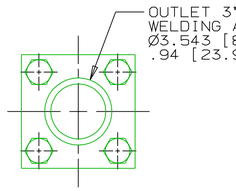

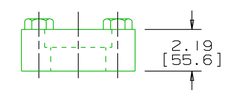

SOCKET WELDING OUTLET OPTION

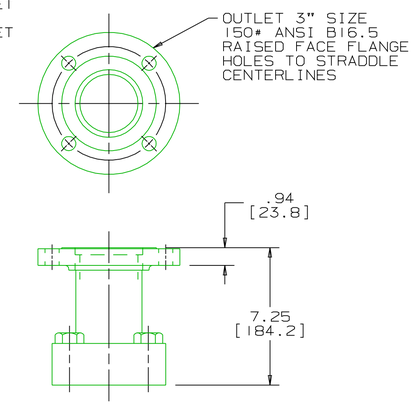

150# RF OUTLET OPTION

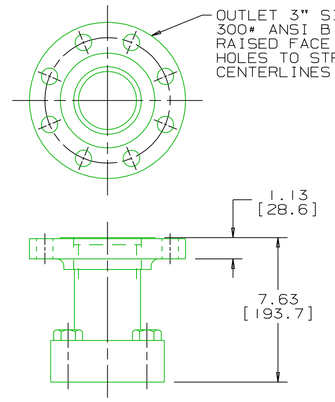

300# RF OUTLET OPTION

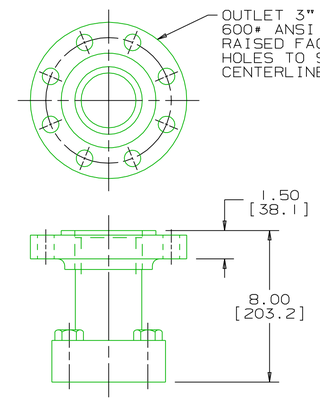

600# RF OUTLET OPTION

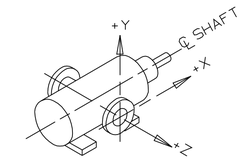

COORDINATE SYSTEM FOR MAXIMUM PUMP FORCES (F) AND MOMENTS (M)

INLET:
FX=300 LBF[1330 N] MX=500 LB FT[678 N·m]
FY=300 LBF[1330 N] MY=500 LB FT[678 N·m]
FZ=300 LBF[1330 N] MZ=500 LB FT[678 N·m]

OUTLET:
FX=225 LBF[1000 N] MX=375 LB FT[508 N·m]
FY=225 LBF[1000 N] MY=375 LB FT[508 N·m]
FZ=225 LBF[1000 N] MZ=375 LB FT[508 N·m]

FORCE AND MOMENT VALUES ARE RELATIVE TO CENTER OF INLET AND OUTLET PORT FACES.

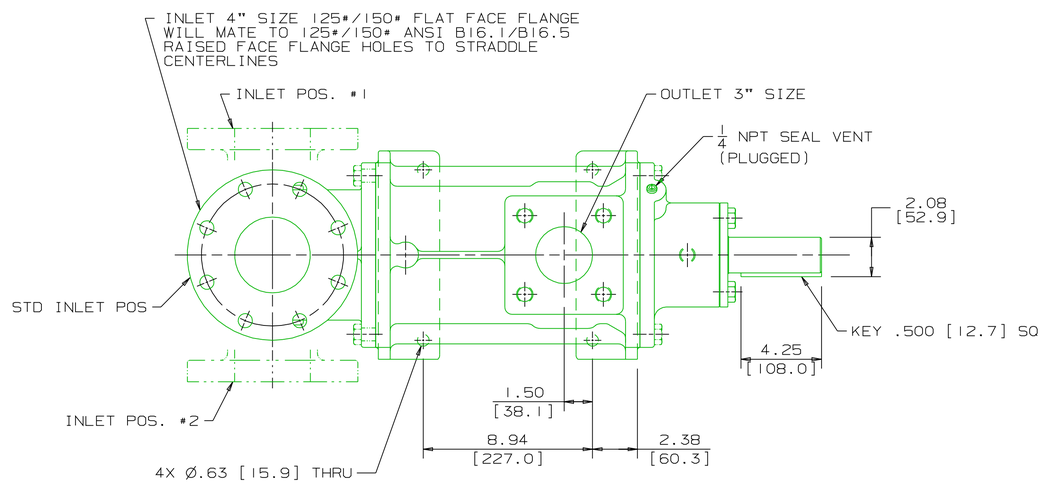

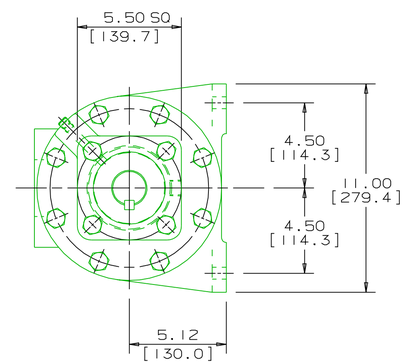

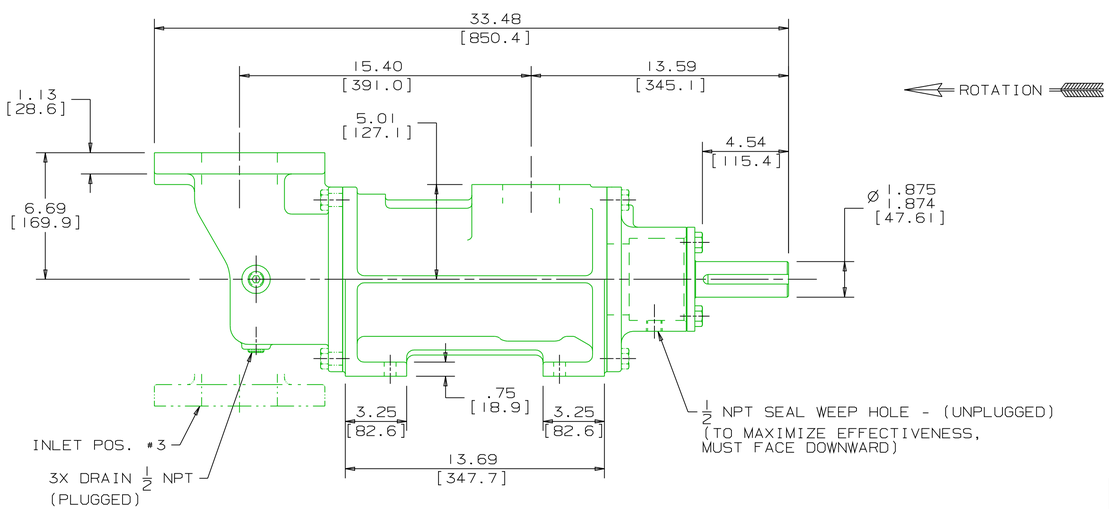

NOTES:
1. UNLESS OTHERWISE SPECIFIED, ALL DIMENSIONS ARE IN INCHES. DIMENSIONS IN [ ] ARE MILLIMETERS.
2. TO MAXIMIZE SEAL LIFE, SEAL VENT MUST BE ORIENTED UPWARD (12 O'CLOCK) WHEN PUMP IS INSTALLED HORIZONTALLY. THIS IS NORMAL VENT ORIENTATION WHEN PUMP FEET ARE ORIENTED DOWNWARD. SEAL VENT ORIENTATION IS NOT CRITICAL WHEN PUMP IS INSTALLED WITH SHAFT VERTICALLY UPWARD.
3. PORT, FOOT, AND SEAL VENT ORIENTATIONS ARE SUPPLIED AS SHOWN ON DRAWING UNLESS OTHERWISE SPECIFIED.
4. ALTERNATE INLET PORT POSITIONS ARE PROVIDED IF SPECIFIED ON ORDER. AVAILABLE POSITIONS ARE: STANDARD, POSITION #1, POSITION #2 OR POSITION #3. ALL INLET PORT POSITIONS ARE RELATIVE TO OUTLET PORT.
5. ESTIMATED WEIGHT (WITHOUT PORT ADAPTERS) 246 LBS [111.6 kg].

DRAWING CERTIFICATION
CUSTOMER NAME ----------
CUSTOMER PO NUMBER ---------
CUSTOMER PART NUMBER -------
BOM NUMBER ----------
PUMP TYPE ----------
SHAFT ROTATION ----------
INLET PORT POSITION --------
OUTLET PORT ADAPTER OPTION -
OTHER INFORMATION
CERTIFIED BY ----------
CERTIFIED DATE ----------
IMO ORDER NUMBER ----------
DATA REVISION NUMBER -------

FOOT MOUNT, RIGHT ANGLE INLET
IRON 3D-275

MATERIAL
PROCESS
COMMENTS:
STANDARD ROTATION IS CLOCKWISE WHEN VIEWED FROM COUPLING END OF PUMP. SUCTION STRAINER AND DISCHARGE RELIEF VALVE MUST BE PROVIDED.
ALIGNMENT:
UNITS ARE ACCURATELY ALIGNED AT THE FACTORY. ALIGNMENT SHOULD BE CHECKED BEFORE STARTING TO ENSURE THAT IT IS STILL WITHIN .005 [0.13] F.I.M.
PRESTARTING:
FLUSH SUCTION PIPING BEFORE CONNECTING PUMP. PRIME AND VENT PUMP. DO NOT START PUMP WITH VALVES CLOSED. READ INSTRUCTION MANUAL FOR DETAILS BEFORE STARTING.

THIRD ANGLE PROJECTION
FIRST ORDER 5004961
USED ON 3217/1000A

WEB ADDRESS: WWW.IMO-PUMP.COM EMAIL: IMO.PUMP@COLFAXCORP.COM

DRAWN	JTT	02-04-99	
CHECKED	MJC	02-09-99	
APPD	MJC	02-09-99	
METHODS			

Imo Pump
1710 Airport Road
PO Box 5020
Monroe, NC USA
28111.5020

TITLE
OUTLINE STANDARD (IRON)
G3D__-275__

SIZE	CAGE CODE	DWG NO
D	59180	SDD19617
SCALE 1/4	WEIGHT SEE NOTE 5	SHEET 1 OF 1